BASE6



QUAD MK2 LED DRIVING LIGHTS

BUILT TO LAST.

IP69K Waterproof Rated Lifetime Warranty General Electric Lexan Lens – Over 200x the impact resistance of glass. DuPont Non Fading Paint Stainless Steel Bracket with Stainless anti theft bolts Deutsch Waterproof Connectors Pure white 5700K colour temperature CREE 5W XTE LEDs

1KM BEAM DISTANCE.

The QUAD MK2 driving lights were designed to deliver the perfect beam pattern, resulting in an amazing 1km @ 1 Lux without compromising on flood performance. With precision focus, these lights will light up the road ahead so you can see everything clearly. Whether you're driving in the city or out in the country, these lights will help you see everything in your path.

ITS IN THE DETAILS.

The BASE6 Quad MK2 Series LED Driving Lights are the whole package offering you everything from a distance, spread and a front position light, all in one compact 6" housing!
The next-generation LED Driving Lights can produce over 1km of light!

Brighter than many full-size driving lights, these quad lights boast all of the build quality benefits and features that make up a more costly product while maintaining an affordable price point. Made for those who need bright illumination on and off-road. The driving lights are built to last with a rigid and near-indestructible build quality. Utilising stainless steel fasteners, IP69K waterproof rating as well GE Lexan lens that offers over 200x the impact resistance of glass!

TECHNICAL INFO.

LED	24 x Oslon High-Flux LED
RAW LUMENS	19,000 (Pair) 8.1A @ 13.2v
AMP DRAW	(each) 96W (each) Combo
POWER DRAW	Beam (Flood & Spot) IP68
BEAM PATTERN	5700K 12v & 24v
IP RATING	
COLOUR (CCT)	
VOLTAGE	
WEIGHT	1.8Kg (Including cover) (each)
LIFESPAN	50,000 Hours



COMBO LENS

Wiring Information

Red Wire: Positive
Black Wire: Earth
White Wire: DRL Light

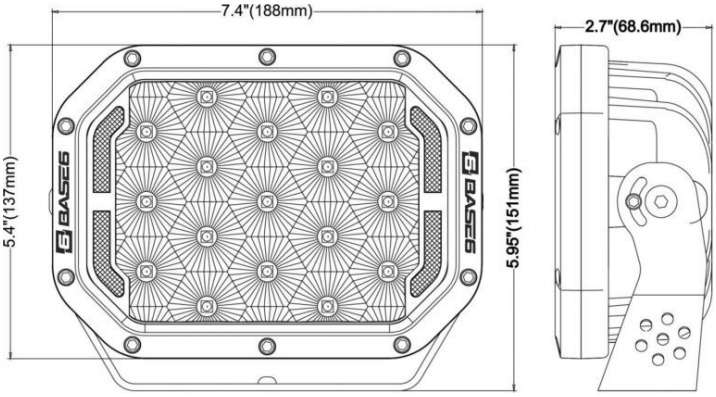

PART NUMBERS.

B6QDL7102C SINGLE
B6QDL7102C/PR PAIR
B6QDL7102C-TP Triple
B6QDL7102C/PRH PAIR W/HARNESS
B6QDL7102C/C REPLACEMENT COVER